Airtek
fan solutions ltd
+44 (0) 1202 623333 enquiries@airtekfs.co.uk

Crossflow Fan Wheels
Diameter: Ø80 – Ø100 – Ø133

Can't see the fan you're looking for?
Our data sheets only show limited options.
Contact us now so we can match your exact requirements
(minimum order quantities apply).

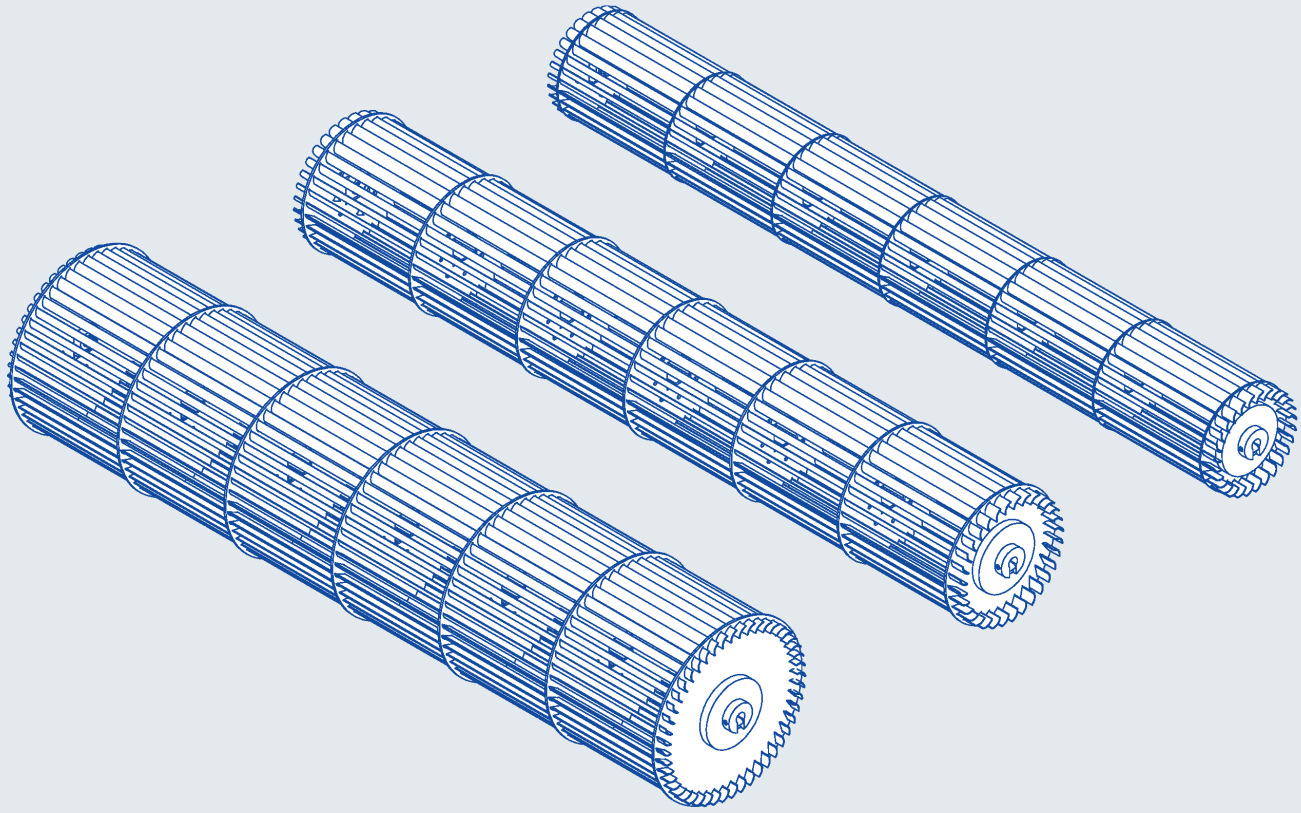

Product Features

Nominal impeller diameter:	80mm, 100mm, 133mm
Nominal impeller lengths:	200mm, 400mm, 600mm, 800mm – others available on request.
Max nominal length of coupled fans:	1600mm
Drive motor type:	N/A
Standard supply voltages:	N/A
Motor and impeller bearing type:	Ball bearing
Optional heater elements:	N/A
Typical applications:	Aircurtain, Wall convector, Air conditioning
Special features:	Compact design. Low noise. Coupled fans for extended length applications. Fan wheels made to your own requirements.
Other options include:	Special lengths, special bearings, shaft mounting, black coating.

CFW00

Note: In keeping with its policy of continuing development and standardisation, the Company reserves the right to change any of its dimensions or specifications shown in this leaflet prior notice.

Airtek fan solutions ltd

+44 (0) 1202 623333 enquiries@airtekfs.co.uk

Crossflow Fan Wheels

Diameter: Ø80 – Ø100 – Ø133

Can't see the fan you're looking for?

Our data sheets only show limited options.
Contact us now so we can match your exact requirements
(minimum order quantities apply).

3rd angle projection.
All dimensions in mm.

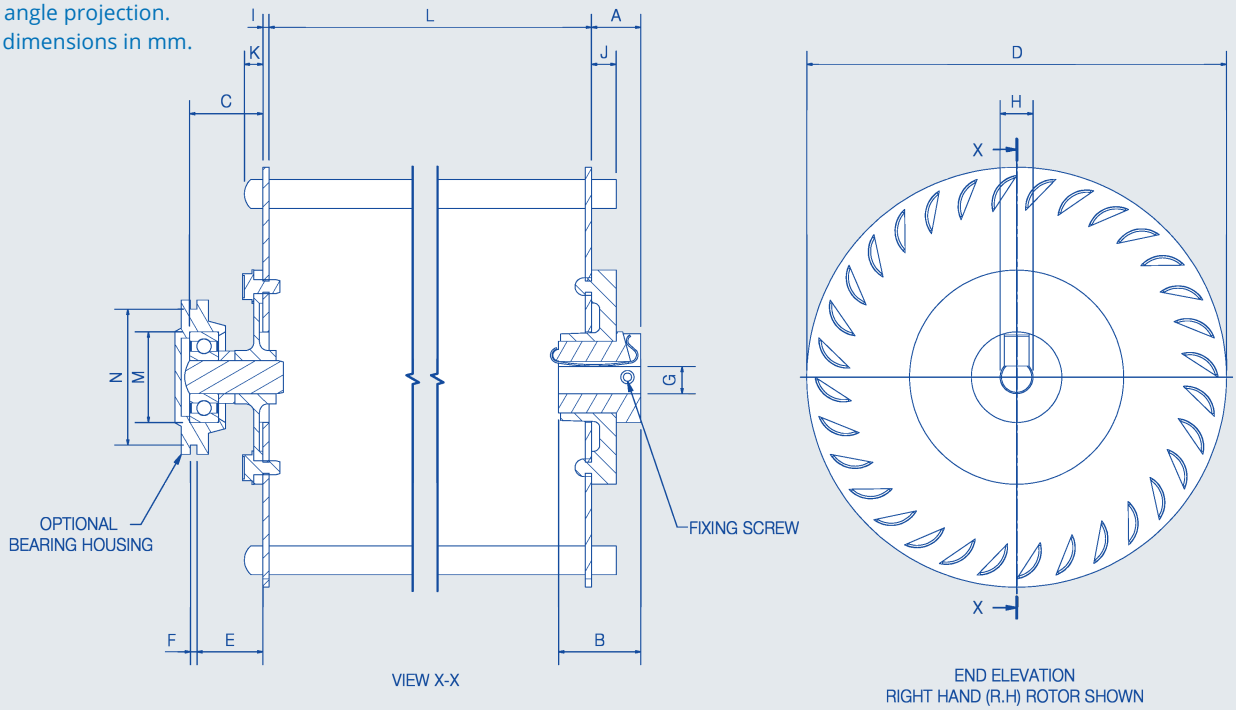

ROTOR SPECIFICATION			
Rotor	Diameter 'D' (mm)	Fan Length 'L' (mm)	Rotation Direction
R	80	200	RH or LH
R	80	400	RH or LH
R	80	600	RH or LH
R	80	800	RH or LH
R	100	200	RH or LH
R	100	400	RH or LH
R	100	600	RH or LH
R	100	800	RH or LH
R	133	200	RH or LH
R	133	400	RH or LH
R	133	600	RH or LH
R	133	800	RH or LH

DIMENSIONS	
Reference	Dimensions (mm)
A	12
B	20
C	17.8*
D	see rotor specification
E	16
F	1.6
G	7.2
H	Ø8
I	1.5
J	6
K	6
L	see rotor specification
M	Ø22
N	Ø33
Other wheel dimensions and specifications available. Please contact us with your requirements.	

*Bearing pin can be fitted with extended shaft to couple wheels together

CFW00

Note: In keeping with its policy of continuing development and standardisation, the Company reserves the right to change any of its dimensions or specifications shown in this leaflet prior notice.